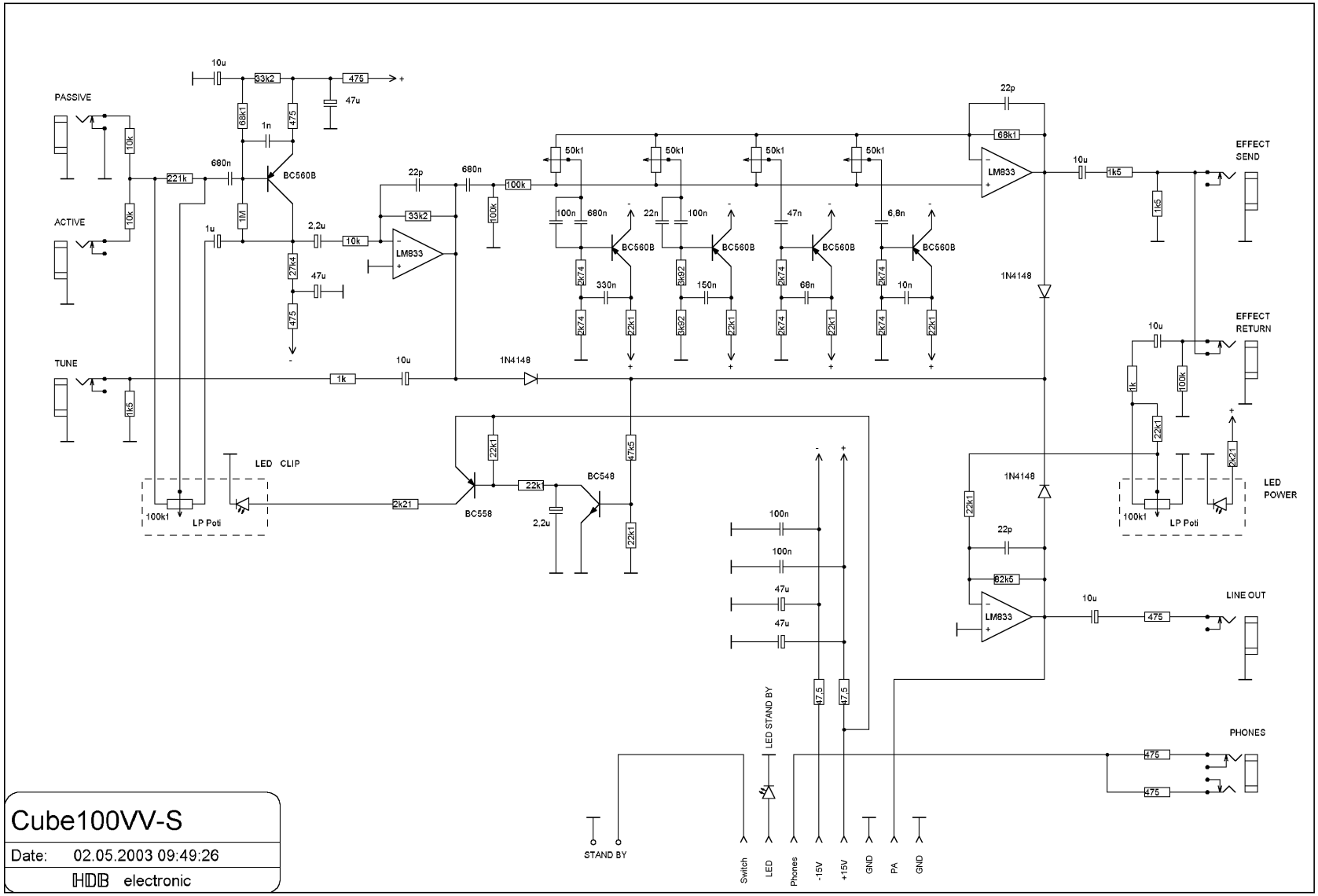

Cube100VV-S

Date: 02.05.2003 09:49:26

HDB electronic

Cube100VV-B

Draw:	28.04.2003 10:18:44
Plot:	>PLOT_DATE_TIME

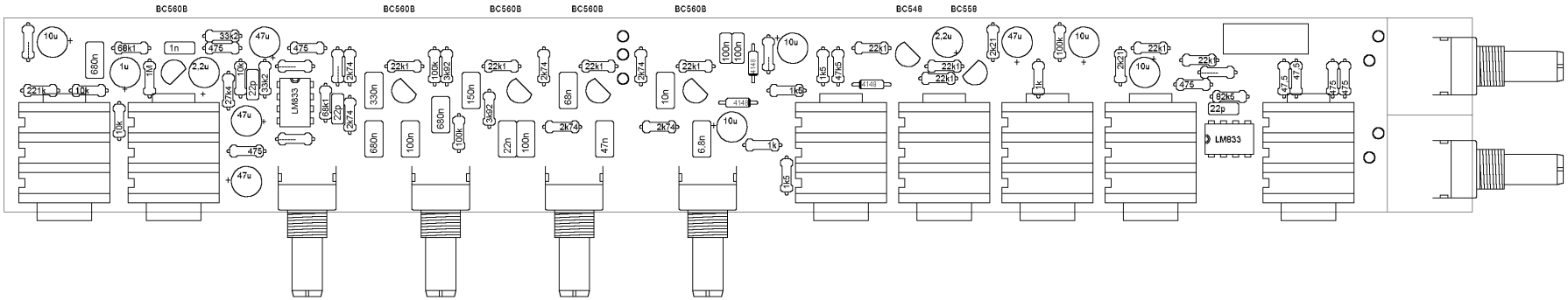

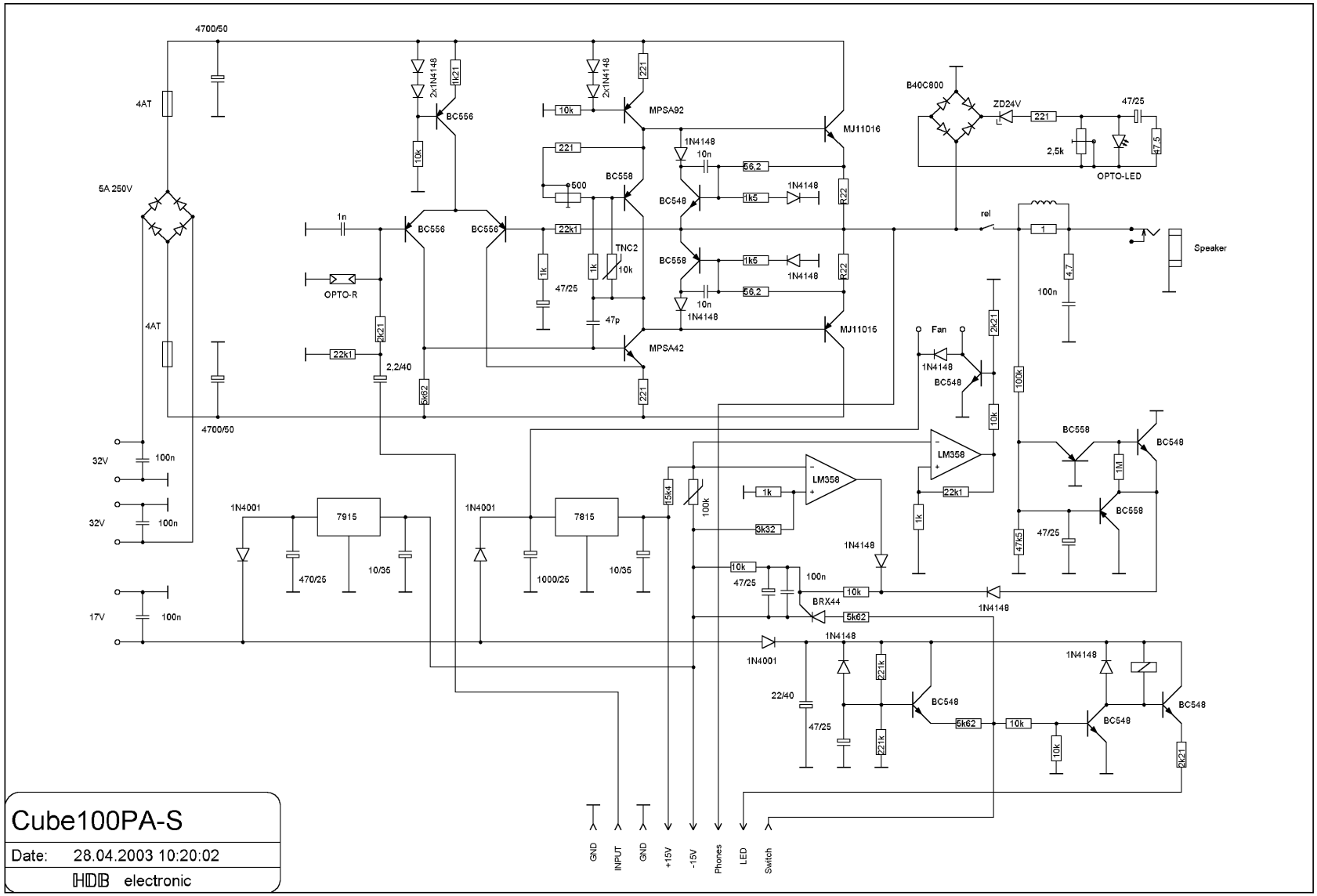

Cube100PA-S

Date: 28.04.2003 10:20:02

HDB electronic

Cube100PA-B

Draw: 28.04.2003 10:17:20
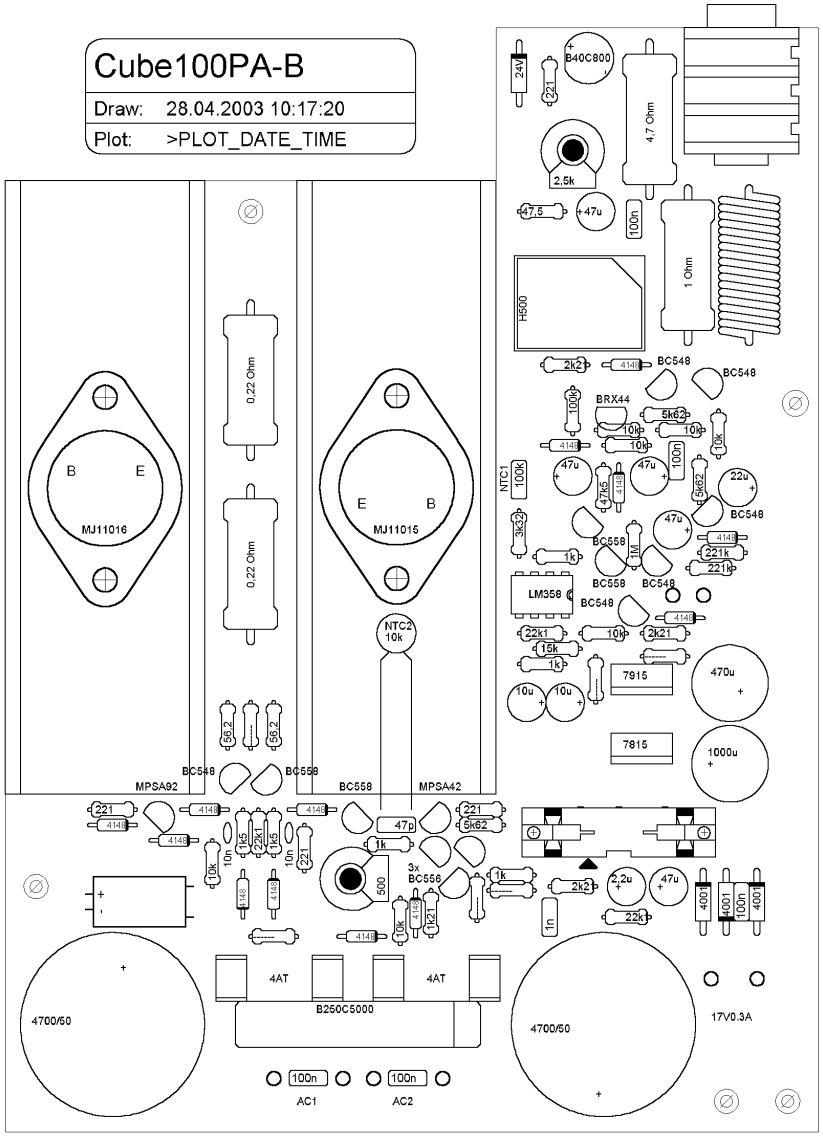
Plot: >PLOT_DATE_TIME